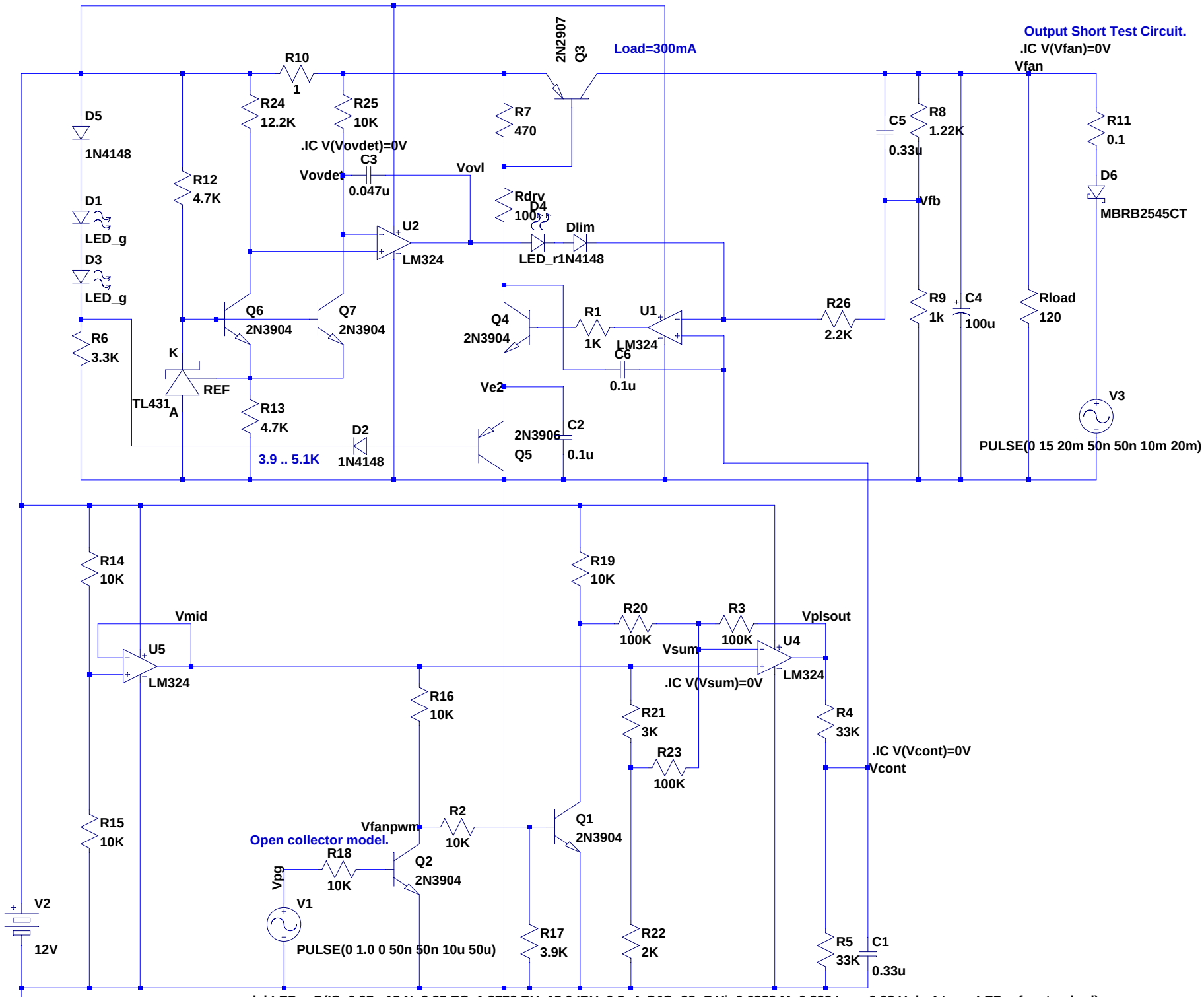
Output Short Test Circuit.
.IC V(Vfan)=0V
Vfan
Load=300mA
2N2907
Q3
R10
1
R24
12.2K
R25
10K
.IC V(Vovdet)=0V
C3
Vovdet
0.047u
Vovl
R7
470
Rdrv
100
D4
Dlim
LED_r1N4148
U2
LM324
D5
1N4148
D1
LED_g
D3
LED_g
R12
4.7K
Q6
2N3904
Q7
2N3904
R6
3.3K
K
REF
TL431
A
R13
4.7K
D2
1N4148
3.9 .. 5.1K
Q4
2N3904
R1
1K
U1
LM324
C6
0.1u
Ve2
2N3906
Q5
C2
0.1u
C5
0.33u
R8
1.22K
Vfb
R9
1k
C4
100u
R26
2.2K
Rload
120
R11
0.1
D6
MBRB2545CT
V3
PULSE(0 15 20m 50n 50n 10m 20m)
R14
10K
Vmid
U5
LM324
R19
10K
R20
100K
R3
100K
Vplsout
Vsum
U4
LM324
.IC V(Vsum)=0V
R16
10K
R21
3K
R23
100K
R4
33K
.IC V(Vcont)=0V
Vcont
R15
10K
Vfanpwm
R2
10K
Q1
2N3904
Open collector model.
R18
10K
Q2
2N3904
Vpg
V1
PULSE(0 1.0 0 50n 50n 10u 50u)
V2
12V
R17
3.9K
R22
2K
R5
33K
C1
0.33u
.tran 0 100m 0 5u
.model LED_r D(IS=6.97e-15 N=2.35 RS=1.3772 BV=15.0 IBV=0.5uA CJO=38pF Vj=0.6323 M=0.323 Iave=0.02 Vpk=4 type=LED mfg=standard)
LED_r model from www.madlabo.com.
--- D:\bsch\4p3p\pwmtoanalog6.asc ---