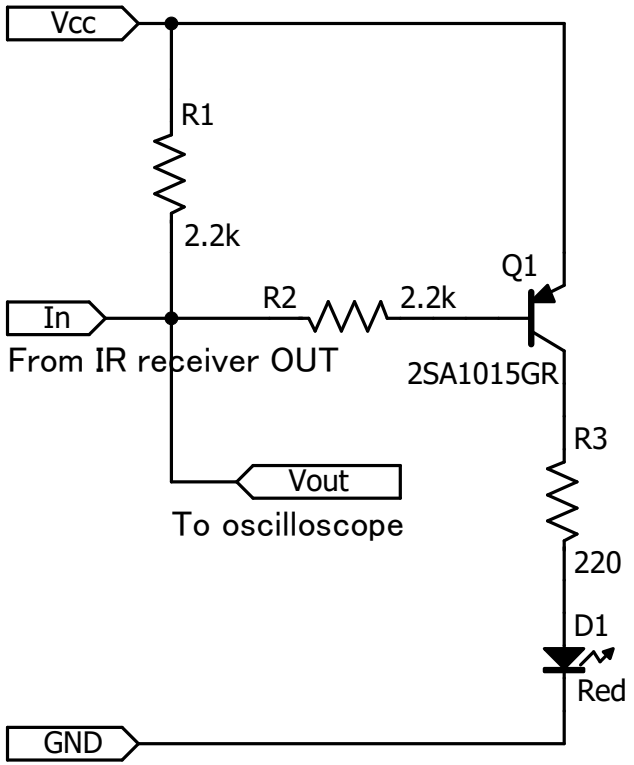
Vcc
R1
2.2k
Q1
In
R2
2.2k
From IR receiver OUT
2SA1015GR
R3
Vout
To oscilloscope
220
D1
Red
GND