Switchs table

External Position	Internal Position	MAIN SW1	P.L. SW2	OUT SW3	OUT SW4	OUT SW5	OUT SW6	S.O. SW7	S.O. SW8	S.O. SW9	T.B. SW10	T.B. SW11	S.B. SW12	S.B. SW13
POWER OFF	POF	OFF	OFF	OFF	OFF	OFF	OFF	OFF	OFF	OFF	OFF	OFF	ON	ON
VOLTAGE CHECK	VCK	ON	ON	OFF	OFF	OFF	OFF	OFF	OFF	OFF	ON	OFF	ON	ON
OUTPUT ON	OP1	ON	ON	OFF	OFF	OFF	OFF	OFF	OFF	OFF	ON	ON	OFF	OFF
	OP2	ON	OFF	ON	ON	ON	ON	OFF	OFF	OFF	OFF	OFF	OFF	OFF
CURRENT CHECK	CC1	ON	ON	ON	ON	ON	ON	ON	ON	OFF	OFF	OFF	ON	ON
	CC2	ON	ON	OFF	OFF	OFF	OFF	ON	ON	ON	OFF	OFF	ON	ON

"OUTPUT ON" is divided into OP1, and OP2 steps.
"OUTPUT ON" = {OP1, OP2}
"CURRENT CHECK" is divided into CC1, and CC2 steps.
"CURRENT CHECK" = {CC1, SS2}

MAIN: Main Switch
P.L.: Pilot Lamp (dimming)
OUT: Output
S.O.: Short Output (Current Check)
T.B.: Temporal Bypass
S.B.: Sense Bypass

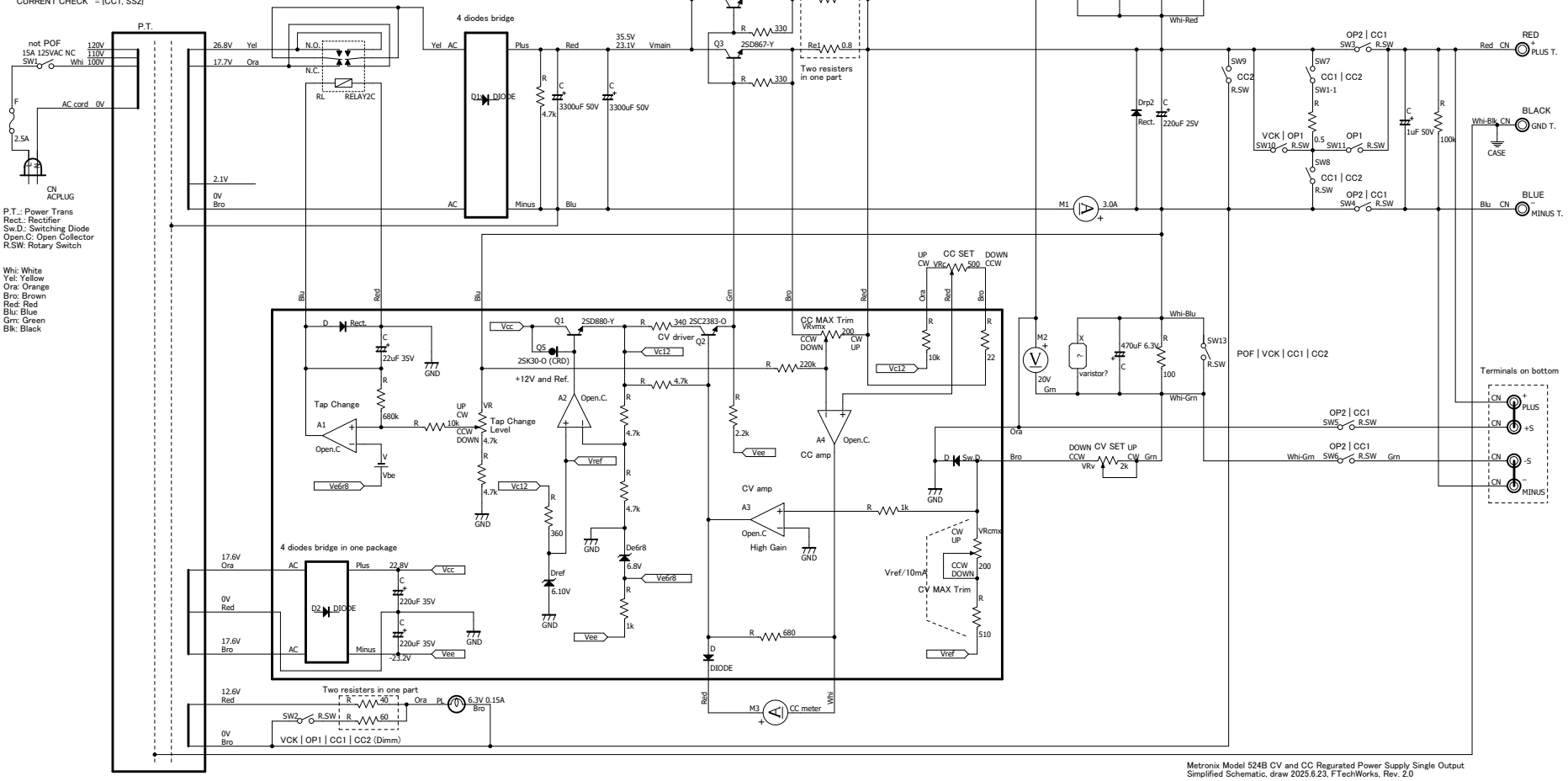

P.T.: Power Trans
Rect.: Rectifier
Sw.D.: Switching Diode
Open.C: Open Collector
R.SW: Rotary Switch

Whi: White
Yel: Yellow
Ora: Orange
Bro: Brown
Red: Red
Blu: Blue
Grn: Green
Blk: Black

Metronix Model 524B CV and CC Regurated Power Supply Single Output
Simplified Schematic, draw 2025.6.23, FTechWorks, Rev. 2.0